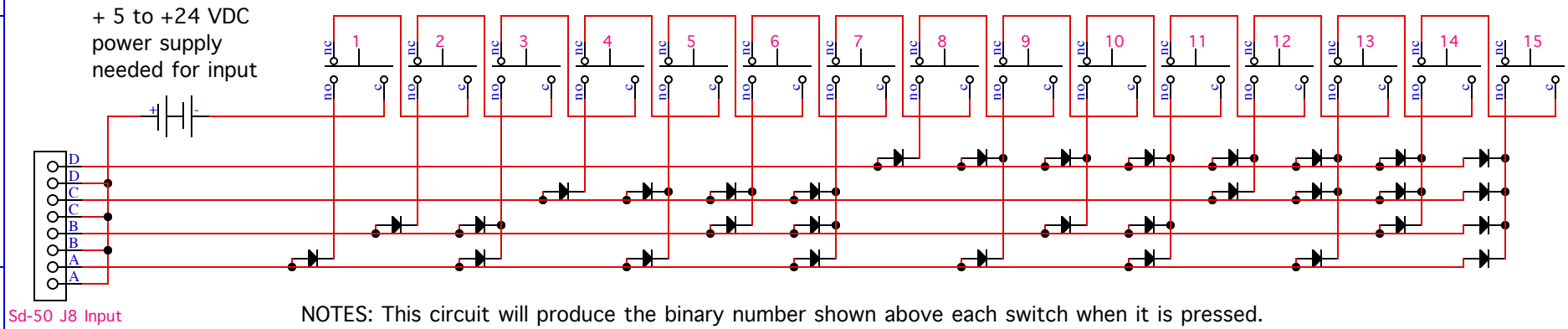

NOTES: This circuit will produce the binary number shown above each switch when it is pressed.

Providing the ground connnection thru the 'normally closed' contacts on the 'upstream' switches provides a prioritizing effect (the lowest numbered button pressed overrides whatever happens on any of the downstream buttons).

Switches can be connected directly to ground if this 'prioritizeing' is not needed.
Typical Small Signal Diodes are 1N914 or IN4148

The J8 inputs to the Sd-50 are optoisolated. They need 5 to 24 vdc to trigger. This 5 to 24 vdc can come from an external power supply, or power can be 'borrowed' from the Sd-50 and its supply.

Gilderfluke & Co.
ROBOTICS & SOUND SYSTEMS

file: binary keypad (15 Button)
page: 1 of 1
updated: 4/19/12

205 South Flower Street • Burbank, CA 91502-2102
818/840-9484 • 800/776-5972 • fax 818/840-9485